PARTS LIST

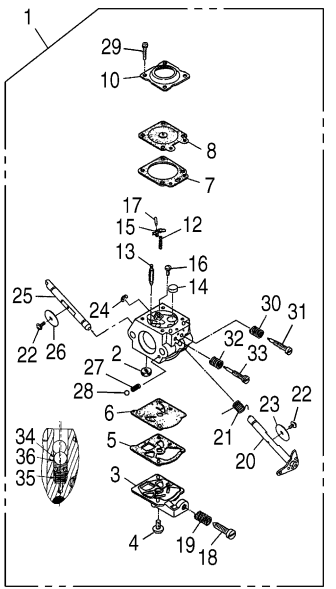

KEY#	PART NUMBER	DESCRIPTION	Q'TY/ UNIT	REMARKS
1	848EW08100	CARBURETOR ASSY	1	
2	3306-81380	• SCREEN	1	
3	3080-81120	• COVER	1	
4	3310-81130	• SCREW	1	
5	3304-81140	• GASKET	1	
6	1172-81150	• DIAPHRAGM	1	
7	2850-81290	• GASKET	1	
8	3310-81260	• DIAPHRAGM	1	
10	3310-81280	• METERING COVER	1	
12	2867-81270	• SPRING	1	
13	3356-81310	• VALVE, inlet	1	
14	1480-81420	• PLUG, welch	1	
15	3310-81230	• LEVER	1	
16	3310-81240	• SCREW	1	
17	3310-81250	• PIN	1	
18	2630-81330	• SCREW	1	
19	3350-81380	• SPRING	1	
20	848EW081T0	• SHAFT, throttle	1	
21	2670-81410	• SPRING	1	
22	2880-81470	• SCREW	2	
23	1282-81340	• VALVE, throttle	1	
24	1148-81390	• RING	1	
25	T2070-81460	• SHAFT, choke	1	
26	2841-81451	• VALVE, choke	1	
27	3350-81350	• SPRING	1	
28	3350-81220	• BALL	1	
29	3310-81351	• SCREW	4	
30	1491-81160	• SPRING	1	
31	1148-81171	• NEEDLE, low speed	1	
32	3080-81320	• SPRING	1	
33	T2070-81330	• NEEDLE, high speed	1	
34	2812-81520	• BALL	1	
35	2810-81530	• SPRING	1	
36	2812-81510	• PISTON	1	

PARTS LIST

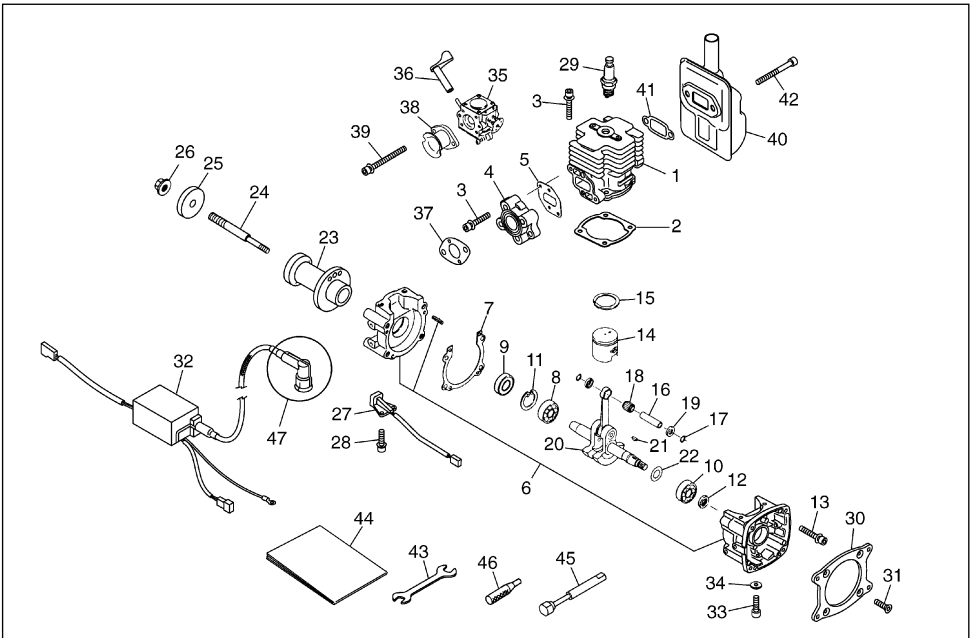

36
35
29
41
42
3
38
39
40
26
25
5
1
4
3
24
37
2
23
15
7
14
9
11
32
8
18
16
19
27
17
47
28
20
21
22
10
6
12
13
30
44
43
46
45
34
31
33

PARTS LIST

KEY#	PART NUMBER	DESCRIPTION	Q'TY/ UNIT	REMARKS
1	848EW012A1	CYLINDER	1	
2	848EW012B0	GASKET, cylinder	1	
3	8488441800	BOLT	6	
4	848EW014A0	INSULATOR	1	
5	848EW014B1	GASKET, insulator	1	
6	848EW02110	CRANKCASE COMP.	1	
7	848EW021D0	GASKET, case	1	
8	1155-21240	BEARING	1	
9	06034-06001	BEARING	1	
10	T1600-21240	BEARING	1	
11	04065-02812	SNAP RING	1	
12	T1600-21210	SEAL	1	
13	3310-72150	BOLT	4	
14	848EW041A1	PISTON	1	
15	T2071-41210	RING	1	
16	1101-41310	PISTON PIN	1	
17	1260-41320	SNAP RING	2	
18	5500-41410	BEARING	1	
19	1101-41340	WASHER	2	
20	848EW04200	CRANKHAFT COMP.	1	
21	848EW042D0	KEY	1	
22	1140-43250	SHIM	1	
23	848EW05290	HUB COMP.	1	
24	848EW052Y0	STUD	1	

KEY#	PART NUMBER	DESCRIPTION	Q'TY/ UNIT	REMARKS
25	1152-43290	WASHER	1	
26	8488608000	NUT	1	
27	848EW071N0	SENSOR	1	
28	8488441400	BOLT	2	
29	3699-92369	SPARK PLUG	1	Y82
30	848EW053X0	MOUNT PLATE	1	
31	3819-54780	SCREW	4	
32	848EW07120	UNIT ASSY	1	
33	01252-30410	B0LT	1	
34	01641-20405	WASHER	1	
35	848EW08100	CARBURETOR ASSY	1	
36	T2070-82410	LEVER, choke	1	
37	848H7014C1	GASKET	1	
38	848ES08300	AIR FUNNEL	1	
39	8488455000	BOLT	2	
40	848EW015A0	MUFFLER	1	
41	1140-13141	GASKET, muffler	1	
42	01252-30540	BOLT	2	
43	8488U30000	SPANNER	1	
44	848EW093A1	OWNER'S MANUAL	1	
45	1101-96220	ROD ASSY	1	OPTION
46	4810-96220	STOPPER	1	OPTION
47	X374320099	CAP REPAIR KIT	1	OPTION